WatchGuard AP420

Hardware Guide

AP420
Access Point

About This Guide

Information in this guide is subject to change without notice. Companies, names, and data used in examples herein are fictitious unless otherwise noted. No part of this guide may be reproduced or transmitted in any form or by any means, electronic or mechanical, for any purpose, without the express written permission of WatchGuard Technologies, Inc.
Guide revised: 2/18/2022

Copyright, Trademark, and Patent Information

Copyright © 1998 - 2022 WatchGuard Technologies, Inc. All rights reserved. All trademarks or trade names mentioned herein, if any, are the property of their respective owners.
Complete copyright, trademark, patent, and licensing information can be found in the Copyright and Licensing Guide, available online at https://www.watchguard.com/wgrd-help/documentation/overview.

About WatchGuard

WatchGuard® Technologies, Inc. is a global leader in network security, providing best-in-class Unified Threat Management, Next Generation Firewall, secure Wi-Fi, and network intelligence products and services to more than 75,000 customers worldwide. The company's mission is to make enterprise-grade security accessible to companies of all types and sizes through simplicity, making WatchGuard an ideal solution for Distributed Enterprises and SMBs. WatchGuard is headquartered in Seattle, Washington, with offices throughout North America, Europe, Asia Pacific, and Latin America. To learn more, visit WatchGuard.com.

For additional information, promotions and updates, follow WatchGuard on Twitter, @WatchGuard on Facebook, or on the LinkedIn Company page. Also, visit our InfoSec blog, Secplicity, for real-time information about the latest threats and how to cope with them at www.secplicity.org.

Address

505 Fifth Avenue South
Suite 500
Seattle, WA 98104

Support

www.watchguard.com/support
U.S. and Canada +877.232.3531
All Other Countries +1.206.521.3575

Sales

U.S. and Canada +1.800.734.9905
All Other Countries +1.206.613.0895

Contents

WatchGuard AP420 Hardware Guide 1

Requirements 1

About Your Hardware 2

Hardware Specifications 2

Environmental Requirements 4

Hardware Description 5

Device Connections and Buttons 5

Device Indicators 7

Mounting Instructions 11

T-Rail Mount Installation 12

Flat Surface Bracket (Optional) 13

Connect the AP 14

Connect the AP for Link Aggregation 14

Ethernet Power Injector (Optional) 15

AC Power Adapter (Optional) 17

Notices 18

Safety Notices 18

Product Safety Certification 18

Safety Warning 18

Disclaimer 18

HINWEISE ZUR SICHERHEIT 18

Sicherheitshinweis 19

AVISO DE SEGURIDAD 19

Certificación de seguridad del producto 19

Advertencia de seguridad 19

FCC Certification 20

CE Notice 21
Industry Canada Certification 21
Europe - EU Declaration of Conformity (Wireless) 23
Brasil ANATEL 26
Mexico NOM 26
Taiwan Class B Notice 26
Taiwan NCC 26
Japan VCCI Notice (Class B ITE) 26
RoHS Statement 26
WEEE Statement 27
REACH Certificate of Compliance 27

WatchGuard AP420 Hardware Guide

WatchGuard AP420 devices are high performance, enterprise access points that feature 4x4:4 MU-MIMO 802.11ac Wave 2 capabilities with dual concurrent 5 GHz and 2.4 GHz radios supporting 802.11a/n/ac Wave 2, 802.11b/g/n, and data rates of up to 1.73 Gbps and 800 Mbps, respectively. The AP420 also contains a third 2x2 MIMO 802.11ac Wave 2 radio for dedicated multi-function security and wireless network scanning (Wi-Fi Cloud mode only).

Requirements

There are two ways you can manage your AP420:

Total Wi-Fi and Secure Wi-Fi with WatchGuard Wi-Fi Cloud

A powerful cloud-based enterprise wireless management solution for AP configuration, security, and monitoring.

Basic Wi-Fi with WatchGuard Firebox Gateway Wireless Controller

Local management, configuration, security, and monitoring of APs directly from your WatchGuard Firebox. The WatchGuard Firebox requires Fireware v11.12.4 and higher.

The third radio is not available when the AP is managed locally with a Gateway Wireless Controller.

About Your Hardware

Hardware Specifications

Chipset	Qualcomm QCA9994
Processor and RAM	Qualcomm IPQ8064 1.4GHz dual core ARM processor with 256 MB RAM and 128 MB Flash
Radio Type and Frequency Band	2.4 GHz, 802.11b/g/n. Max data rate: 800 Mbps 5 GHz, 802.11a/n/ac. Max data rate: 1.733 Gbps Third radio for dedicated RF and security scanning in Wi-Fi Cloud mode
Antenna	10 integrated omnidirectional antennas ■ 4 antennas: 2.4 GHz radio ■ 4 antennas: 5 GHz radio ■ 2 antennas: Third scanning radio
Ethernet Interface	1 x 10/100/1000 Mbps Gigabit Ethernet (LAN1) 802.3at PoE+ / 802.3af PoE, PoE input voltage: 48V 1 x 10/100/1000 Mbps Gigabit Ethernet (LAN2) for a wired extension of an SSID or link aggregation. 1 x RJ45 serial console RS232 Serial Bits per second: 115200 Data Bits: 8, Stop Bits: 1 Parity: None, Flow Control: None
USB Port	1 USB 2.0 port (not in use)
Power Interface	Power over Ethernet: 802.3at (PoE+) / 802.3af (PoE) DC jack (6.3 mm connector): 12V DC input, 2.0A
Power Consumption	Max: PoE+ (802.3at): 21.5W Max: PoE (802.3af): 12.95W Max: DC power: 17.9W Min: 8.1W Average: 16W

MTBF Rating	1,320,756 hours at 25°C 662,479 hours at 40°C
Dimensions	L = 220 mm (8.66") W = 220 mm (8.66") H = 57 mm (2.24")
Weight	1.3 kg (2.86 lbs)

Environmental Requirements

To safely install your WatchGuard AP, we recommend that you:

- Install the device indoors
- Make sure the device has adequate clearance for air flow and cooling
- Connect the device to a surge-protected power supply to prevent damage from sudden power changes

Other environmental requirements:

Operating Temperature	0° to 40°C (32° to 104°F)
Operating Humidity	0% to 95% non-condensing
Non-operating Temperature	-25° to 75°C (-13° to 167°F)
Non-operating Humidity	0% to 95%, non-condensing

Hardware Description

Device Connections and Buttons

Ethernet Network Interfaces

LAN1 (PoE+): Standard RJ45 connector that supports link speeds of 10/100/1000 Mbps and PoE+ connectivity.

LAN2: Standard RJ45 connector that supports link speeds of 10/100/1000 Mbps.

You can configure this interface as a wired extension for an SSID or for link aggregation. For more information, see the *WatchGuard Wi-Fi Cloud Help*.

For APs managed locally by a Gateway Wireless Controller with Fireware v12.2.1 and higher, you can bridge together the LAN ports on AP models that have two LAN interfaces. This enables you to extend the wired network on the second LAN interface. For more information, see the *Fireware Help*.

Power Input

The WatchGuard AP420 can be powered by 802.3at PoE+ or 802.3af PoE on the LAN1 (PoE+) interface, or an optional power adapter.

To make sure that LLDP-capable switches provide appropriate PoE+ power to the AP420:

- You must enable LLDP on the switch
- Disable static allocation of maximum power of 30W (if previously configured)

For more information, see WatchGuard APs and PoE+ power with switches and LLDP.

The use of 802.3af PoE results in limited feature functionality of the AP:

- USB port and LAN2 Ethernet extension port is disabled.
- The 2.4 GHz radio is downgraded to 1x1 15dbm or lower, or as set in the device template.
- The 5 GHz radio is downgraded to 1x1 15dbm or lower, or as set in the device template.
- Third scanning radio is downgraded to 1x1 with 12dBm transmit power. Lower PoE power results in reduced performance and effectiveness of WIPS scanning and intrusion prevention functions.

Console Port

Standard RJ45 connector for serial console access.

USB Port

The USB port is currently not in use.

Reset Button

Resets the WatchGuard AP to factory-default settings. You must use a paper clip or other small object to press the reset button through the small hole on top of the device.

To reset the device to factory-default settings, press and hold the reset button for up to 10 seconds until all LEDs go off to indicate that the device has rebooted.

Kensington Security Lock Slot

Kensington security lock slot for use with a security cable to secure your device.

Device Indicators

The front panel of the AP420 has four LEDs that indicate the status of the AP.

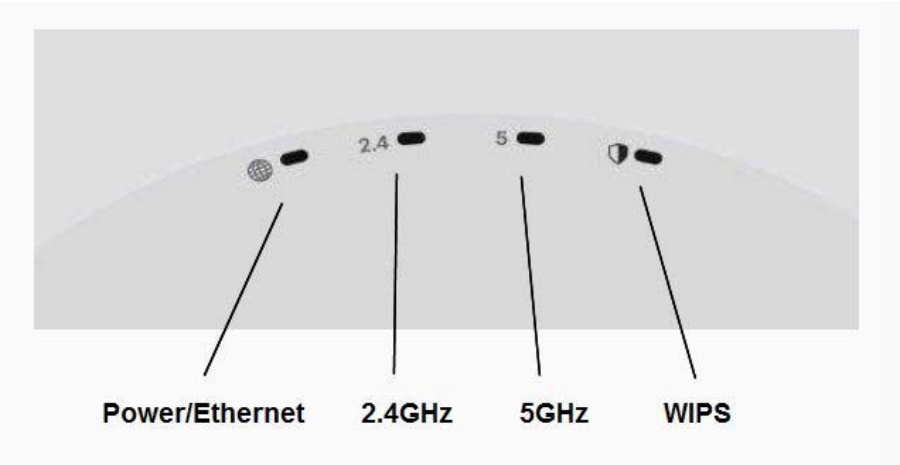

The AP420 operates in AP combo mode where the 2.4 GHz and 5 GHz radios work in AP mode to broadcast Wi-Fi, while the third radio operates in WIPS (Wireless Intrusion Prevention System) sensor mode (Wi-Fi Cloud management only).

Device Indicators in AP Firmware 8.8.1 and Higher

LED	Power/Ethernet	2.4 GHz, 5 GHz, and Third Radio
Off	Powered off.	8.8.2 and higher: No SSID enabled on the radio. 8.8.1: Wireless radio is inactive.
Green	Powered on. Operating at normal power and capabilities. (PoE+ or DC power). Connected at 10/100/1000 Mbps.	8.8.2 and higher: Wireless radio is active with a configured SSID WIPS scanning is active on third radio (Wi-Fi Cloud mode only) 8.8.1: Wireless radio is active.
Flashing Green	Not connected to Wi-Fi Cloud or paired with a Gateway Wireless Controller.	-
Orange	Powered on. Operating at reduced power and capabilities. (For example: PoE 802.3af). See WatchGuard AP Power Requirements.	-
Flashing Orange	No IP address received from DHCP.	-

Device Indicators in AP Firmware 8.8.0 and Lower

Power / Ethernet	2.4 GHz	5 GHz	Description
Solid Green	Solid Green	Solid Green	Powered on and operating correctly with a gigabit Ethernet connection. Connected to WatchGuard Wi-Fi Cloud services.
Fast Flash Green	Any	Any	Did not receive a valid IP address from DHCP. Connected with a gigabit Ethernet connection.
Slow Flash Green	Any	Any	Cannot connect to WatchGuard Wi-Fi Cloud services. Connected with a gigabit Ethernet connection.
Solid Green / Solid Yellow	Fast Flash Green	Solid Green	Troubleshooting running on 2.4GHz radio. LED1 = Solid green if AP is on gigabit Ethernet connection. Solid yellow if on non-gigabit Ethernet connection.
Solid Green / Solid Yellow	Solid Green	Fast Flash Green	Troubleshooting running on 5GHz radio. LED1 = Solid green if AP is on gigabit Ethernet connection. Solid yellow if on non-gigabit Ethernet connection.
Solid Green / Solid Yellow	Slow Flash Green	Solid Green	Prevention running on 2.4GHz radio. LED1 = Solid green if AP is on gigabit Ethernet connection. Solid yellow if on non-gigabit Ethernet connection.
Solid Green / Solid Yellow	Solid Green	Slow Flash Green	Prevention running on 5GHz radio. LED1 = Solid green if AP is on gigabit Ethernet connection. Solid yellow if on non-gigabit Ethernet connection.
Solid Yellow	Solid Green	Solid Green	Powered on and operating correctly with non-gigabit Ethernet connection. Connected to WatchGuard Wi-Fi Cloud services.
Fast Flash Yellow	Any	Any	Did not receive a valid IP address from DHCP. Connected with non-gigabit Ethernet connection.
Slow Flash Yellow	Any	Any	Cannot connect to WatchGuard Wi-Fi Cloud services. Connected with non-gigabit Ethernet connection.

Power / Ethernet	2.4 GHz	5 GHz	Description
Solid Orange	Any	Any	No Ethernet connection.
Slow Flash Orange	Any	Any	Software upgrade in progress.
Off	Off	Off	Not powered on or in startup process.

Mounting Instructions

Your package includes the AP420 device, and a mounting bracket.

AP420

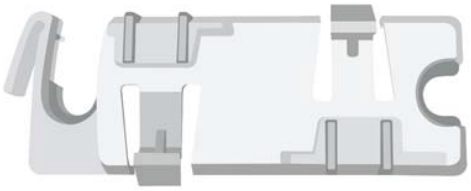

15/16" (24mm) Mounting Bracket

The MAC address and serial number of your AP are printed on a label on the back of the device. Make sure you record this information before you mount the AP.

T-Rail Mount Installation

Use the included mounting bracket (15/16”, 24mm, Part #: WG8021) to install the AP420 on a ceiling with a T-rail. Optional T-rail mount brackets are available from WatchGuard:

- 9/16” T-rail mount, 15mm, Part #: WG8026
- Silhouette/Interlude T-rail mount, 15mm, Part #: WG8027

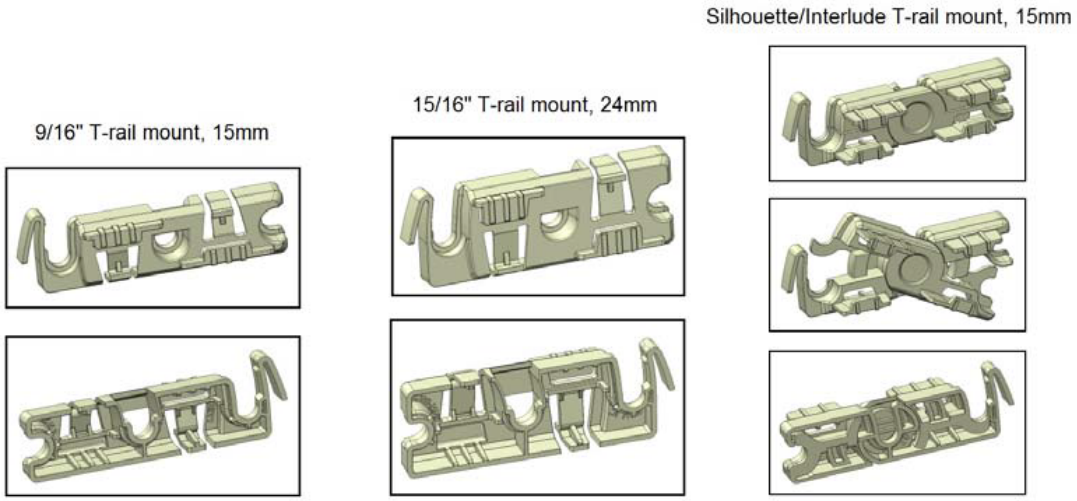

1. Put the first mounting post on the back of the AP over the lower bracket notch and rotate into place.

2. Make sure that all the mounting posts on the back of the AP are securely positioned in their bracket notches.
3. To attach the bracket to the T-rail, rotate the bracket so it is parallel to the T-rail, and snap the bracket on the T-rail.

Flat Surface Bracket (Optional)

An optional surface mount bracket for walls or ceilings is available from WatchGuard (Part #: WG8020).

1. Attach the bracket to the wall with screws.
2. Pull the side latch to unlock the mount bracket.
3. Attach the AP stubs to the bracket holders.
4. Lock the latch and attach the AP to the mount with the included screw.

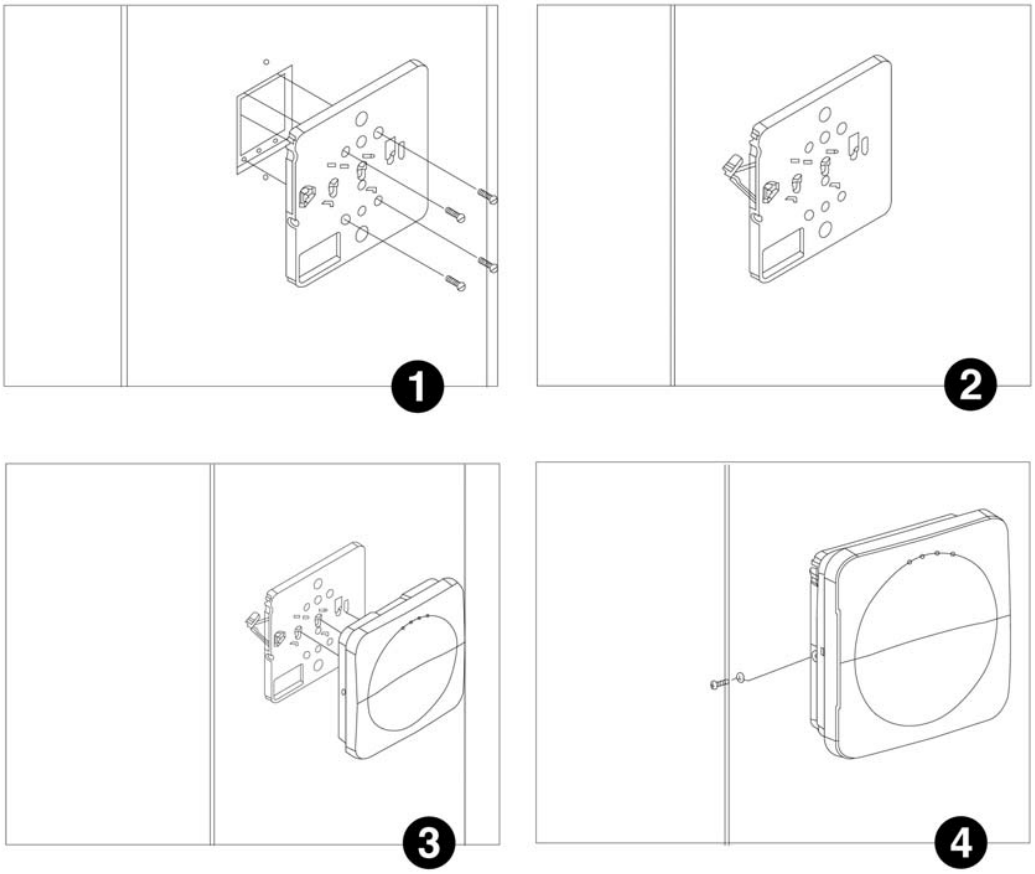

Connect the AP

To power on and connect the AP420 to the network with PoE+:

1. Connect one end of the network interface cable to the LAN1 PoE+ port on the AP420.
2. Connect the other end of the network interface cable to an Ethernet jack that provides PoE+ power.

To connect the AP420 to the network and to power on the AP420 with a power adapter:

1. Connect one end of the network interface cable to the LAN1 PoE+ port on the AP420.
2. Connect the other end of the network interface cable to an Ethernet network jack.
3. Plug the power adapter cable into the 12V DC power receptacle on the back of the AP420.
4. Plug the power adapter into an 100V-240V 50/60 Hz AC power source.

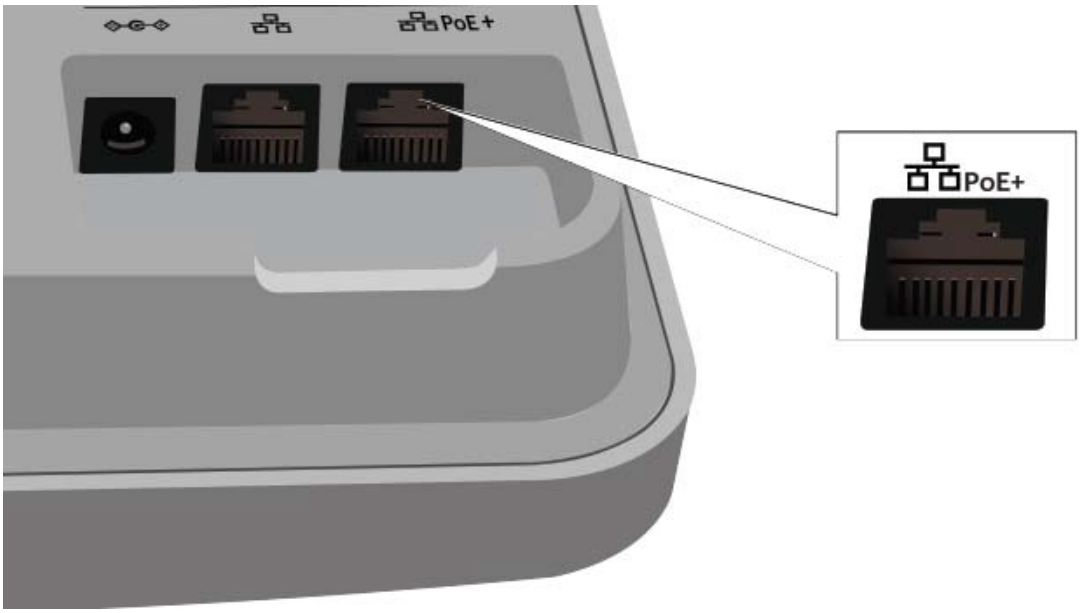

Connect the AP for Link Aggregation

With WatchGuard Wi-Fi Cloud, you can use both Ethernet ports of the AP420 for link aggregation that enables these ports to logically merge into a single link for higher aggregate bandwidth.

You must enable link aggregation in a device template for the AP420, and link aggregation must also be enabled on your network switch for the two ports connected to your AP. Both links should use CAT6 Ethernet cabling.

Make sure that PoE+ power is supplied to the indicated first Ethernet port labeled PoE+ on the AP420.

Ethernet Power Injector (Optional)

You can power the WatchGuard AP with an optional Ethernet Power Injector. This PoE+ capable device allows you to power the WatchGuard AP through an existing Ethernet connection. With this feature, you do not have to position your WatchGuard AP near a power outlet.

This device complies with IEEE 802.3at/af PoE specifications. Do not use any PoE adapters that are not IEEE 802.3at/af compliant as they may damage your device.

To connect an Ethernet Power Injector to the WatchGuard AP:

1. Plug the Ethernet Power Injector into an AC power source.
2. Connect an Ethernet cable from your network backbone (for example, a router, switch, or hub) to the **LAN** connector on the Ethernet Power Injector.
3. Connect an Ethernet cable from the LAN1 PoE+ Ethernet interface on the AP to the **PoE** connector on the Ethernet Power Injector.

The table below provides the specifications for the Ethernet PoE Injector.

WatchGuard Part Number	802.3at PoE+ Injector with AC cord (US/FCC) (WG8599) 802.3at PoE+ Injector with AC cord (CE) (WG8600) 802.3at PoE+ Injector with AC cord (UK) (WG8601) 802.3at PoE+ Injector with AC cord (AUS) (WG8602)
Specification	IEEE 802.3at/af
AC Input Voltage Rating	100-240VAC
Input Current	0.8A max for 100VAC
Output Power	30W maximum
Ethernet Interfaces	LAN: RJ-45 for 10/100/1000/2500 Mbps data POE: RJ-45 for 10/100/1000/2500 Mbps data and power Voltage: Pin4, 5:54V, Pin7, 8:Return
Indicator	Power: Green
Temperature	Operating: 0 - 40°C (32 - 104°F) Storage: -30 - 80°C (-22 - 176°F)
Humidity	5% - 90% Operating and storage
Dimensions	L = 99 mm (3.9") W = 68.5 mm (2.27") H = 33 mm (1.3")
Weight	2.86 lbs (1.3 kg)

AC Power Adapter (Optional)

An optional AC power adapter supplies 12V DC power to the WatchGuard AP420 and includes region-specific adapter plugs.

The table below provides the specifications for the AC power adapter.

WatchGuard Part Number	WG8025
AC Input Voltage Rating	100-240V, 50-60Hz
Output Voltage	DC 12V, 2.0A
Region-specific Adapter Plugs	US, EU, UK
Temperature	Operating: 0 - 40°C (32 - 104°F) Storage: -20 - 70°C (-4 - 158°F)
Humidity	Operating: 0% - 90% Storage: 0% - 95%

Notices

All WatchGuard products are designed and tested to meet strict safety requirements. These requirements include product safety approvals and other global compliance standards. Please read these instructions carefully before operating the product, and refer to them as needed to ensure the continued safe operation of your product.

For patent information, please visit http://www.watchguard.com/patents

Safety Notices

All WatchGuard products are designed and tested to meet strict safety requirements. These requirements include product safety approvals and other global compliance standards. Read these instructions carefully before you operate the product, and refer to them as needed for continued safe operation of your product.

Product Safety Certification

The WatchGuard product is safety certified under the following standards:

- IEC 60950-1:2005 (Second Edition)+Am 1:2009+Am 2:2013
- EN 60950-1:2006+A11+A1+A12+A2:2013
- EN 61000-3-2:2006+A1:2009+A2:2009
- EN 61000-3-3:2008

Safety Warning

- Do not place objects on the power cord.
- Do not obstruct the ventilation openings. These openings prevent overheating of the machine.
- Never push objects of any kind into slots or openings on this equipment. Making a contact with a voltage point or shorting out a part may result in fire or electrical shock.
- When removing or installing an appliance, follow the general installation safety instructions.

Disclaimer

WatchGuard shall not be held liable if the end user alters, modify, or repairs any WatchGuard hardware appliance.

HINWEISE ZUR SICHERHEIT

Alle WatchGuard Produkte werden entwickelt und getestet, um strenge Sicherheitsanforderungen zuerfüllen. Diese Anforderungen umfassen Produktsicherheit Zulassungen und andere globale Compliance-Standards. Bitte lesen Sie die folgenden Anweisungen sorgfältig, bevor Sie das Produkt, und bezeichnen sie als notwendig, um den sicheren Betrieb des Geräts zu gewährleisten.

Die WatchGuard Produkt ist Sicherheit unter den folgenden Normen zertifiziert:

- IEC 60950-1:2005 (Second Edition)+Am 1:2009+Am 2:2013
- EN 60950-1:2006+A11+A1+A12+A2:2013

- EN 61000-3-2:2006+A1:2009+A2:2009
- EN 61000-3-3:2008

Sicherheitshinweis

- Legen Sie keine Gegenstände auf das Netzkabel.
- Verdecken Sie nicht die Lüftungsöffnungen. Diese Öffnungen verhindern eine Überhitzung der Maschine.
- Stecken Sie niemals Gegenstände jeglicher Art in die Schlitze oder Öffnungen des Geräts stecken. Der Kontakt mit einem spannungsführenden Punkt oder das Kurzschließen eines Bauteils kann zu einem Brand oder elektrischen Schlag führen.
- Beim Entfernen oder Installieren eines Gerätes, nach den allgemeinen Installation Sicherheitshinweise.

AVISO DE SEGURIDAD

Todos los productos WatchGuard están diseñados y probados para satisfacer estrictos requisitos de seguridad. Estos requisitos incluyen la homologación de productos de seguridad y otras normas de cumplimiento global. Por favor, lea atentamente las siguientes instrucciones antes de utilizar el producto, y se refieren a ellos como sea necesario para garantizar el funcionamiento seguro y continuo de su producto. Información adicional se puede encontrar en la Guía del usuario electrónica.

Certificación de seguridad del producto

El producto tiene certificación de seguridad WatchGuard bajo las siguientes normas:

- IEC 60950-1:2005 (Second Edition)+Am 1:2009+Am 2:2013
- EN 60950-1:2006+A11+A1+A12+A2:2013
- EN 61000-3-2:2006+A1:2009+A2:2009
- EN 61000-3-3:2008

Advertencia de seguridad

- No coloque objetos sobre el cable de alimentación.
- No obstruya las aberturas de ventilación. Estas aberturas evitan el sobrecalentamiento de la máquina.
- Nunca introduzca objetos de ningún tipo en las ranuras o aberturas del equipo. El contacto con puntos de voltaje o el cortocircuito de una pieza podría provocar un incendio o una descarga eléctrica.
- Al extraer o instalar un electrodoméstico, siga las instrucciones generales de instalación de seguridad.

FCC Certification

This device complies with part 15 of the FCC Rules. Operation is subject to the following two conditions: (1) This device may not cause harmful interference, and (2) this device must accept any interference received, including interference that may cause undesired operation.

This device has been tested and found to comply with the limits for a Class B digital device, pursuant to Part 15 of the FCC Rules. These limits are designed to provide reasonable protection against harmful interference in a residential installation. This equipment generates uses and can radiate radio frequency energy and, if not installed and used in accordance with the instructions, may cause harmful interference to radio communications. However, there is no guarantee that interference will not occur in a particular installation if this equipment does cause harmful interference to radio or television reception, which can be determined b turning the equipment off and on, the user is encouraged to try to correct the interference by one or more of the following measures:

- Reorient or relocate the receiving antenna.
- Increase the separation between the equipment and receiver.
- Connect the equipment into an outlet on a circuit different from that to which the receiver is connected.
- Consult the dealer or an experienced radio/TV technician for help.

* FCC Caution:

Any changes or modifications not expressly approved by the party responsible for compliance could void the user's authority to operate this equipment.

This transmitter must not be co-located or operating in conjunction with any other antenna or transmitter.

For operation within 5.15 ~ 5.25GHz / 5.47 ~5.725GHz frequency range, it is restricted to indoor environment. The band from 5600-5650MHz will be disabled by the software during the manufacturing and cannot be changed by the end user. This device meets all the other requirements specified in Part 15E, Section 15.407 of the FCC Rules.

IMPORTANT NOTE:

FCC Radiation Exposure Statement:

This equipment complies with FCC radiation exposure limits set forth for an uncontrolled environment. This equipment should be installed and operated with minimum distance 50cm between the radiator & your body.

Note: The country code selection is for non-US model only and is not available to all US model. Per FCC regulation, all WiFi product marketed in US must fixed to US operation channels only.

Dieses Gerät wurde getestet und entspricht den Grenzwerten für ein Digitalgerät der Klasse B gemäß Teil 15 der Federal Communications Commission (FCC) Regeln einhalten. Diese Grenzwerte sollen einen angemessenen Schutz vor schädlichen Störungen, wenn das Gerät in einer kommerziellen Umgebung betrieben wird. Dieses Gerät erzeugt, verwendet und kann Hochfrequenzenergie abstrahlen, und wenn nicht installiert und in Übereinstimmung mit der Bedienungsanleitung, kann es Störungen im Funkverkehr verursachen. Der Betrieb dieses Gerätes in einem Wohngebiet wird wahrscheinlich schädliche Interferenzen in dem Fall muss der Benutzer die Störungen auf seine / ihre eigene Kosten zu beheben.

CE Notice

The CE symbol on your WatchGuard Technologies equipment indicates that it is in compliance with the Electromagnetic Compatibility (EMC) directive and the Low Voltage Directive (LVD) of the European Union (EU).

This equipment should be installed and operated with minimum distance 50cm between the radiator & your body.

Industry Canada Certification

This device complies with ISED's licence-exempt RSSs. Operation is subject to the following two conditions:

(1) This device may not cause harmful interference, and (2) this device must accept any interference received, including interference that may cause undesired operation.

Le présent appareil est conforme aux CNR d' ISED applicables aux appareils radio exempts de licence. L'exploitation est autorisée aux deux conditions suivantes : (1) le dispositif ne doit pas produire de brouillage préjudiciable, et (2) ce dispositif doit accepter tout brouillage reçu, y compris un brouillage susceptible de provoquer un fonctionnement indésirable.

Caution

(i) the device for operation in the band 5150-5250 MHz is only for indoor use to reduce the potential for harmful interference to co-channel mobile satellite systems;

(ii) the maximum antenna gain permitted for devices in the bands 5250-5350 MHz and 5470-5725 MHz shall be such that the equipment still complies with the e.i.r.p. limit;

(iii) the maximum antenna gain permitted for devices in the band 5725-5850 MHz shall be such that the equipment still complies with the e.i.r.p. limits specified for point-to-point and non-point-to-point operation as appropriate; and

(iv) the worst-case tilt angle(s) necessary to remain compliant with the e.i.r.p. elevation mask requirement set forth in Section 6.2.2(3) shall be clearly indicated.

(v) Users should also be advised that high-power radars are allocated as primary users (i.e. priority users) of the bands 5250-5350 MHz and 5650-5850 MHz and that these radars could cause interference and/or damage to LE-LAN devices.

Avertissement

Le guide d'utilisation des dispositifs pour réseaux locaux doit inclure des instructions précises sur les restrictions susmentionnées, notamment :

(i) les dispositifs fonctionnant dans la bande 5150-5250 MHz sont réservés uniquement pour une utilisation à l'intérieur afin de réduire les risques de brouillage préjudiciable aux systèmes de satellites mobiles utilisant les mêmes canaux;

(ii) le gain maximal d'antenne permis pour les dispositifs utilisant les bandes de 5250 à 5 350 MHz et de 5470 à 5725 MHz doit être conforme à la limite de la p.i.r.e;

(iii) le gain maximal d'antenne permis (pour les dispositifs utilisant la bande de 5 725 à 5 850 MHz) doit être conforme à la limite de la p.i.r.e. spécifiée pour l'exploitation point à point et l'exploitation non point à point, selon le cas;

(iv) les pires angles d'inclinaison nécessaires pour rester conforme à l'exigence de la p.i.r.e. applicable au masque d'élévation, et énoncée à la section 6.2.2 3), doivent être clairement indiqués.

(v) De plus, les utilisateurs devraient aussi être avisés que les utilisateurs de radars de haute puissance sont désignés utilisateurs principaux (c.-à-d., qu'ils ont la priorité) pour les bandes 5250-5350 MHz et 5650-5850 MHz et que ces radars pourraient causer du brouillage et/ou des dommages aux dispositifs LAN-EL.

This radio transmitter (IC: 8252A-C75) has been approved by Industry Canada to operate with the antenna types listed below with the maximum permissible gain indicated. Antenna types not included in this list, having a gain greater than the maximum gain indicated for that type, are strictly prohibited for use with this device.

Le présent émetteur radio (IC : 8252A-C75) a été approuvé par Industrie Canada pour fonctionner avec les types d'antenne énumérés ci-dessous et ayant un gain admissible maximal d'antenne. Les types d'antenne non inclus dans cette liste, ou dont le gain est supérieur au gain maximal indiqué, sont strictement interdits pour l'exploitation de l'émetteur.

Dynamic Frequency Selection (DFS) for devices operating in the bands 5250- 5350 MHz, 5470-5600 MHz and 5650-5725 MHz.

Sélection dynamique de fréquences (DFS) pour les dispositifs fonctionnant dans les bandes 5250-5350 MHz, 5470-5600 MHz et 5650-5725 MHz.

For indoor use only.

Pour une utilisation en intérieur uniquement.

Radiation Exposure Statement:

This equipment complies with ISED radiation exposure limits set forth for an uncontrolled environment. This equipment should be installed and operated with minimum distance 20cm between the radiator & your body.

Déclaration d'exposition aux radiations:

Cet équipement est conforme aux limites d'exposition aux rayonnements ISED établies pour un environnement non contrôlé. Cet équipement doit être installé et utilisé avec un minimum de 20cm de distance entre la source de rayonnement et votre corps.

Ant.	Antenna Gain		Cable Loss		True Gain (dBi)	
	2.4GHz	5GHz	2.4GHz	5GHz	2.4GHz	5GHz
1	4.64	N/A	0.3	N/A	4.34	N/A
2	4.56	N/A	0.54	N/A	4.02	N/A
3	4.47	N/A	0.45	N/A	4.02	N/A
4	4.82	N/A	0.1	N/A	4.72	N/A
5	N/A	5.71	N/A	0.58	N/A	5.13
6	N/A	5.64	N/A	0.6	N/A	5.04
7	N/A	5.67	N/A	0.89	N/A	4.78
8	N/A	5.68	N/A	0.89	N/A	4.79
9	4.2	5.77	0.5	0.91	3.7	4.86
10	4.64	5.75	0.49	0.89	4.15	4.86

Europe - EU Declaration of Conformity (Wireless)

This device complies with the essential requirements of the RED Directive 2013/53/EU. The following test methods have been applied in order to prove presumption of conformity with the essential requirements of the RED Directive 2013/53/EU:

EN60950-1/A12:2011+A2:2013

Safety of Information Technology Equipment

EN 50385:2002

Product standard to demonstrate the compliance of radio base stations and fixed terminal stations for wireless telecommunication systems with the basic restrictions or the reference levels related to human exposure to radio frequency electromagnetic fields (110MHz - 40 GHz) - General public

EN 300 328 V1.8.1:2012

Electromagnetic compatibility and Radio spectrum Matters (ERM); Wideband transmission systems; Data transmission equipment operating in the 2.4GHz ISM band and using wide band modulation techniques; Harmonized EN covering the essential requirements of article 3.2 of the RED Directive

EN 301 893 V1.7.1:2012

Broadband Radio Access Networks (BRAN); 5GHz high performance RLAN; Harmonized EN covering the essential requirements of article 3.2 of the RED Directive

EN 301 489-1 V1.9.2:2011

Electromagnetic compatibility and Radio spectrum Matters (ERM); Electro Magnetic Compatibility (EMC) standard for radio equipment and services; Part 1: Common technical requirements

EN 301 489-17 V2.2.1:2012

Electromagnetic compatibility and Radio spectrum Matters (ERM); ElectroMagnetic Compatibility (EMC) standard for radio equipment; Part 17: Specific conditions for Broadband Data Transmission Systems

This device is a 5GHz wideband transmission system (transceiver), intended for use in all EU member states and EFTA countries, except in France and Italy where restrictive use applies.

In Italy the end-user should apply for a license at the national spectrum authorities in order to obtain authorization to use the device for setting up outdoor radio links and/or for supplying public access to telecommunications and/or network services.

This device may not be used for setting up outdoor radio links in France and in some areas the RF output power may be limited to 10 mW EIRP in the frequency range of 2454 - 2483.5 MHz. For detailed information the end-user should contact the national spectrum authority in France.

AT	BE	BG	CZ	DK
EE	FR	DE	IS	IE
IT	EL	ES	CY	LV
LI	LT	LU	HU	MT
NL	NO	PL	PT	RO
SI	SK	TR	FI	SE
CH	UK	HR		

Declaration of Conformity

WatchGuard Technologies Inc. hereby declares that the product(s) listed below conform to the European Union directives and standards identified in this declaration.

Product (s):

Wireless Access Point, WatchGuard Model AP420

EU Directive(s):

Radio & Télécommunications Terminal Equipment (1999/5/EC)
Low Voltage (2006/95/EC)
Electromagnetic Compatibility (2004/108/EC)
Energy-related Products (2009/125/EC)
RoHS (2002/95/EC)
WEEE Directive 2002/96/EC
The Radio Equipment Directive (2014/53/EU)

Common Standard(s):

EN 60950-1:2006+A11+A1+A12+A2:2013	Safety for ITE
EN 55024:2010	Immunity for ITE
EN 55032:2012/AC:2013	
EN 62311:2008	
EN 50385:2002	
EN 61000-3-2:2014	Harmonics
EN 61000-3-3:2013	Flicker

Wireless Standard(s):

EN 301 489-01 v2.1.1	EMC and Radio Spectrum Matters
EN 301 489-17 v3.1.1	EMC and Radio Spectrum Matters
EN 300 328 v2.1.1	Radio Spectrum Matters
EN 301 893 v2.2.0	Broadband Radio Access Networks

This device complies with Directive 2014/53/EU issued by the Commission of the European Community.

Manufacturer / Hersteller:	WatchGuard Technologies 505 5th Ave S. Suite 500, Seattle, WA 98104 USA
Radio Equipment / Funkanlage:	Wireless Access Point
Type Designation / Typenbezeichnung:	AP420
Specifications / Technische Daten:	802.11a,b,g,n,ac (2.4Ghz & 5GHz)
Intended Purpose / Verwendungszweck:	Indoor Access Point
Equipment Class / Betriebsmittel der Klasse:	Class II

The above device complies with the essential requirements and other relevant provisions to Directive 2014/53/EU when used for its intended purpose. This equipment may be operated in the USA, Canada, & Europe Union.

Warning! This is a Class B product. In a domestic environment this product may cause radio interference in which case the user may be required to take adequate measures.

The frequency and maximum transmitted power limit in EU are listed as belows,

2412 - 2472 MHz: 20 dBm
5150 - 5350 MHz: 23 dBm
5250 - 5350 MHz: 30 dBm
5470 - 5725 MHz: 30 dBm

Restrictions: France (i) les dispositifs fonctionnant dans la bande 5150-5250 MHz sont réservés uniquement pour une utilisation à l'intérieur afin de réduire les risques de brouillage préjudiciable aux systèmes de satellites mobiles utilisant les mêmes canaux; (ii) De plus, les utilisateurs devraient aussi être avisés que les utilisateurs de radars de haute puissance sont désignés utilisateurs principaux (c.-à-d., qu'ils ont la priorité) pour les bandes 5 250-5 350 MHz et 5 650-5 850 MHz et que ces radars pourraient causer du brouillage et/ou des dommages aux dispositifs LAN-EL.

Die oben genannten Gerät entspricht den grundlegenden Anforderungen und anderen relevanten Bestimmungen der Richtlinie 2014/53/EU, wenn für den vorgesehenen Zweck verwendet werden. Dieses Gerät ist für die Verwendung in den USA, Kanada, and Europäische Union.

Warnung! Dies ist eine Einrichtung der Klasse B. Diese Einrichtung kann im Wohnbereich Funkstörungen verursachen. In diesem Fall kann vom Betreiber verlangt werden, angemessene Maßnahmen durchzuführen

Einschränkungen: Frankreich –(i)-Geräte, die im Band 5150-5250 MHz ist nur für den Innenbereich, um das Risiko von Störungen des mobilen Satelliten-Systeme, die die gleichen Kanäle (ii) Darüber hinaus reduzieren vorbehalten, sollten Benutzer auch darauf hingewiesen werden, dass die Nutzer von Hochleistungs-Radare bezeichnet werden primäre Benutzer (dh d. sie haben Priorität) der Bänder 5 250-5 350 MHz und 5 650-5 850 MHz und dass diese Radargeräte können Störungen und / oder Schäden an LE-LAN-Geräten verursachen.

Laurence Huang

Signature
Full Name: Laurence Huang
Position: Manufacturing Program Manager
Date: May 23, 2017

Brasil ANATEL

Este equipamento opera em caráter secundário, isto é, não tem direito à proteção contra interferência prejudicial, mesmo de estações do mesmo tipo e não pode causar interferência a sistemas operando em caráter primário.

Mexico NOM

La operación de este equipo está sujeta a las siguientes dos condiciones: (1) es posible que este equipo o dispositivo no cause interferencia perjudicial y (2) este equipo o dispositivo debe aceptar cualquier interferencia, incluyendo la que pueda causar su operación no deseada.

Taiwan Class B Notice

警告使用者:這是乙類產品,應使用並正確安裝。本產品可能會造成無線電干擾,在這種情況下,用戶

可能需要採取適當的措施。

警示 本電池如果更換不正確會有爆炸的危險,請勿自行更換電池

Taiwan NCC

低功率電波輻射性電機管理辦法

第十二條 經型式認證合格之低功率射頻電機,非經許可,公司　商號或使用者均不得擅自變更頻率

加大功率或變更原設計之特性及功能。

第十四條 低功率射頻電機之使用不得影響飛航安全及干擾合法通信;經發現有干擾現象時,應立即停

用,並改善至無干擾時方得繼續使用。前項合法通信,指依電信法規定作業之無線電通信。

低功率射頻電機須忍受合法通信或工業、科學及醫療用電波輻射性電機設備之干擾。在5.25-5.35秭赫

頻帶內操作之無線資訊傳輸設備,限於室內使用。

電磁波曝露量MPE標準值1mW/cm2,本產品使用時建議應距離人體:50 cm。

無線資訊傳輸設備避免影響附近雷達系統之操作

Japan VCCI Notice (Class B ITE)

この装置は、クラスB情報技術装置です。この装置は、家庭環境で使用することを目的とし

ていますが、この装置がラジオやテレビジョン受信機に近接して使用されると、受信障害を

引き起こすことがあります。取扱説明書に従って正しい取り扱いをして下さい。VCCI-B

RoHS Statement

The member states of the European Union approved directive 2002/95/EC, Restrictions of Hazardous Substances (“RoHS directive”) that became valid on July 1, 2006. It states that all new electrical and electronic equipment put on the market within the member states must not contain certain hazardous materials. This device complies with the European Union’s R0HS directive 2002/95/EC and similar regulations that may be adopted by other countries for European Sales.

WEEE Statement

WEEE is a general set of requirements dictated in the EU Directive 2002/96/EC. This Directive mandated that member EU countries enact regulations governing the Waste of Electrical and Electronic Equipment (WEEE). The Directive, and its individual transpositions into specific country laws and legislation, is aimed at the reduction of WEEE through reuse, recovery, and recycling of WEEE.

WatchGuard is working in partnership with our European Union (EU) distribution partners to ensure that our products are in compliance with the WEEE statutes, and that the recovery of our product per the specific EU country legislative requirements is seamless for our product's end users. If you have a WatchGuard product that is at its end of life and needs to be disposed of, please contact WatchGuard Customer Care Department at:

U.S. Customers: 877.232.3531

International Customers: +1.206.613.0456

WatchGuard is reasonably confident that our products do not contain any substances or hazardous materials presently banned by any legislation, and do not present a risk due to hazardous materials. WEEE recovery professionals should also note that these products do not have any materials that are of particular high value in their individual form.

REACH Certificate of Compliance

The new EU chemicals policy REACH (Registration, Evaluation, Authorization and restriction of Chemicals) came into effect on June 1, 2007. REACH is Europe's new chemicals legislation, which is applicable in all 27 EU Member States as well as the EFTA European Economic Area (EEA). REACH creates a new system for gathering information, assessing risks to human health and the environment, and authorizing or restricting the marketing and use of chemicals produced or supplied in the EEA. REACH has an impact on EEA producers and importers of finished products and users of chemicals in the course of industrial or professional activities.

WatchGuard supports the overall REACH objective of improving the protection of human health and the environment and will meet all applicable REACH requirements. WatchGuard is strongly committed to working with our customers and supply chain to define and implement the REACH requirements and ensure a smooth transition to compliance.

One of the REACH requirements is that manufacturers and importers have the duty to register substances they are producing or importing. In accordance with the regulations, the products of WatchGuard do not need to be registered for the following reasons:

- WatchGuard does not import more than 1 metric ton per year of a substance as defined by REACH.
- WatchGuard products are non-chemical products that are not designed to release any substance under normal and reasonably predictable application.
- Our products do not contain the listed substances at more than 0.1% by weight of the whole product/part.